LEGUAN®

Versatile and reliable self-propelled access platforms.

Leguan Lifts.

LEGUAN LIFTS specializes in designing and manufacturing reliable and technologically advanced self-propelled access platforms. Leguan has a long tradition in this field; the first self-propelled access platform with outriggers was introduced in 1994. Leguan Lifts is part of the fast-growing Avant Tecno Group from Finland.

Every spider lift is designed with extraordinary all-terrain capabilities and robust boom structure, which makes Leguans versatile and fit for any access job. Leguans are built to withstand all climates from the heat of Australia to the freezing cold winters of the Nordics. In recent years, Leguan Lifts has completely restructured their product selection introducing many unseen features and the most user-friendly interface to date.

LEGUAN LIFTS maintains close relationships with major customers and international distributors to ensure the highest standard of customer satisfaction and product development process. As a member of IPAF, Leguan Lifts promotes the safe and effective use of MEWPs worldwide.

Versatile.

Leguan spider lifts are known for their exceptional off-road capabilities, and industry-leading gradeability. Sturdy track chassis with leading ground clearance and travel speeds ensure rapid transitioning through snow or mud. The fuel-efficient combustion engine and silent electric operation makes Leguan a great fit for both inside and outside use, and the compact size makes transportation easy.

Intuitive and user-friendly.

Advanced hydraulic design allows smooth and simultaneous boom movements, which makes it easy to maneuver Leguans in narrow places and maintain distance to walls. The new Leguan spider lifts are equipped with user-friendly features such as automatic levelling that allows effortless outrigger levelling with just a single push of a button, even on challenging terrain.

Next generation features.

Both the safety features and the proportional outreach monitoring system is controlled by a modern PLC that ensures the highest standard of safety combined with unrivalled outreach in all situations. Leguan Lifts lead the way with superior industrial design, numerous technological innovations and smart energy saving functions, which provide Leguans with high resale values over time.

PART OF AVANT GROUP

All rights reserved. © Leguan Lifts 2023

Leguan customers.

WE LISTEN TO our customers and work in close collaboration with our distributors in the design work of our spider lifts. Customers who trust in Leguan spider lifts report that thanks to our equipment they can work faster and take on more projects. Read what else our customers think about us and watch the video interviews in in the news section of our website.

Tree care company, USA

WE ARE doing jobs we couldn't do without the machine. Whether it be trees that are unsafe to climb, or tight places, things that we just couldn't handle climbing ourselves. Now we can get to almost anything with the lift.

Rental company, Norway

IT IS simply so efficient to use, as it is fast to setup, disassemble and versatile in use. A normal two-day job will be done in a day, if the customer chooses to use a Leguan.

Industries.

LEGUAN LIFTS manufactures self-propelled access platforms that are used by rental companies, arborists, housing and renovation companies, electrical installation companies and construction professionals around the world. The cornerstones of our design are unmatched all-terrain capabilities, ease of use and smart technological innovations.

Tree care

Premium all-terrain capabilities and sturdy booms make Leguan a perfect choice for arborists. Leguan spider lifts are used for clearing electric lines and removal of trees all around the globe from the United States all the way to Australia. Our customers tell us that their work has become more efficient and safer as they are able use Leguan spider lifts to reach targets that have previously required climbing.

Rental industry

Leguan access platforms make great rental lifts thanks to their versatility, high utilization rate and excellent performance in any weather. In Nordic conditions, spider lifts are normally used from early spring to late autumn, but Leguans can be used year-round. We placed a special emphasis in intuitive and easy controls in the design of our next-generation Leguan spider lifts.

All rights reserved. © Leguan Lifts 2023

Spider lifts.

LEGUAN product line consists of self-propelled access platforms or spider lifts that are designed both for indoor and outdoor use. You can choose how to equip your Leguan from vast selection of accessories and transport your Leguan easily with a lightweight trailer.

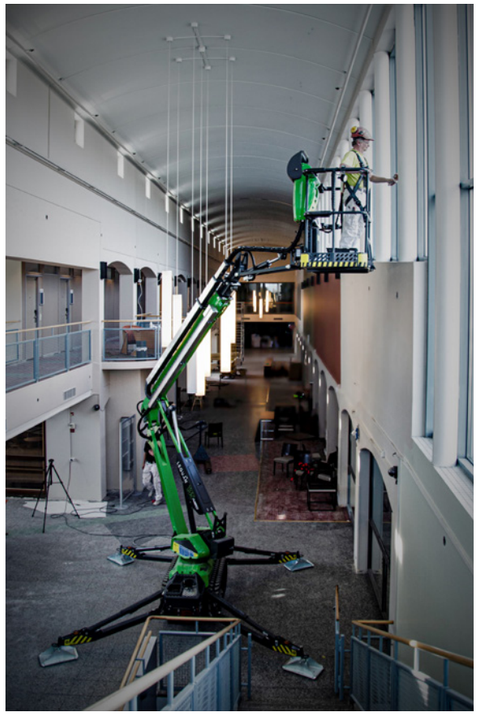

225

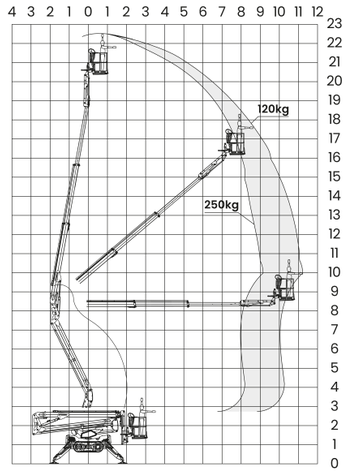

190

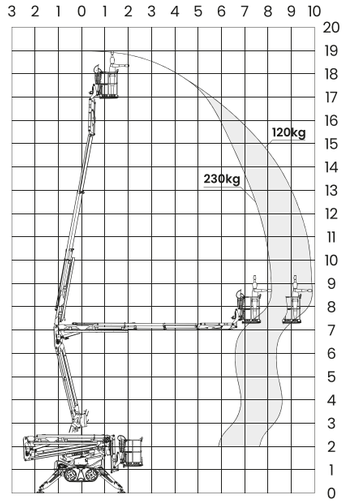

135 NEO

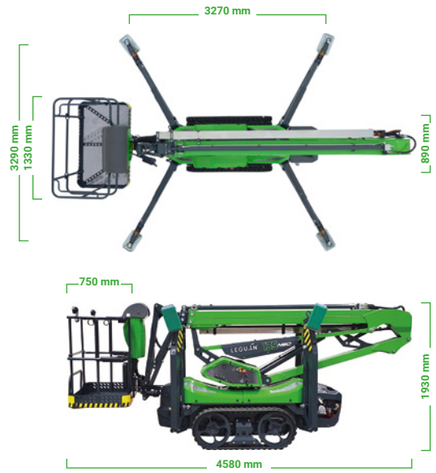

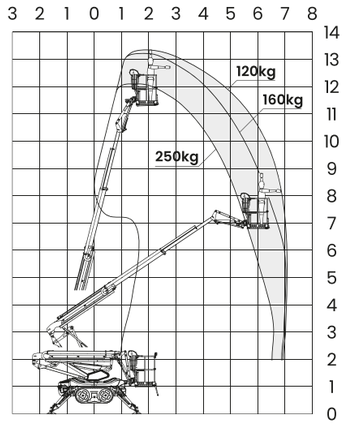

All rights reserved. © Leguan Lifts 2023

Leguan 225.

225

22.5 m
max. working height

11.2 m
max. side reach

250 kg
max. lift capacity

All-terrain spider lift with unrivaled performance.

INDUSTRY-LEADING all-terrain capabilities, a high-profile track platform and fast driving speeds make the next-generation Leguan 225 a perfect choice for even the most demanding environments. The spider lift's boom is designed to maximize side reach even at high working heights, and a smart control interface guarantees quick and smooth movements.

Thanks to our user-friendly joystick controls, controlling the boom structure is steady and simultaneous movements come naturally. The Leguan 225's smart features reduce malfunctions and increase efficiency so that you can focus on the project at hand. The boom is shielded from external blows, falling branches and sawdust, making the 225 a great choice for arborists and construction workers alike.

225

Leguan 225.

Standard features.

- 21 hp Kubota diesel engine + 230 V electric motor
- 230 V and USB power outlets on platform
- Automatic engine RPM control
- Automatic start-stop function for electric motor
- Automatic levelling of the outriggers
- Proportional outreach monitoring system
- Electric rotation of the platform
- Home function / Back to work position function
- JIB-boom with 120-degree operating range
- Battery powered emergency lowering system
- Lower controls with integrated service display
- Signal horn

Optional features.

- Remote control for driving and outriggers
- LED spot lights for platform
- Tool trays on platform
- Outrigger beacons
- Hose to platform (air/water)
- Engine heater
- Non-marking tracks
- Narrow single person platform
- Leguan special trailer

Technical features.

Max. lift capacity	250 kg (2 persons)
Max. working height	22.5 m
Max. platform height	20.5 m
Max. outreach	9.1 m (250 kg) – 11.2 m (120 kg)
Transport dimensions, L x W x H	6.03 x 1.33 x 2.2 m
Platform dimensions	1.33 x 0.75 m
Rotation of the platform	110° (±55°)
Slewing	360°
Gradeability	45% (25°)
Dimensions w/o platform, L x W	5.27 x 1.25 m
Outrigger support dimensions	4.08 x 4.08 m
Max. slope for outriggers	25 % (14°)
Weight	2,950 kg
Engine	Kubota 21 hp diesel or 230 V / 2.2 kW electric
Drive system: hydraulic	tracks
Max. drive speed	3.1 km/h

All rights reserved. © Leguan Lifts 2023

Leguan 190.

190

19.0 m
max. working height

9.8 m
max. side reach

230 kg
max. lift capacity

Robust and steady spider lift with all-terrain capabilities.

LEGUAN 190 is an access platform designed for heavy duty professional and rental use. In the design of the spider lift, special attention has been paid to durability, excellent up-and-over clearance and user-friendly interface. Leguan 190 is the right choice for tree care, painters, construction work and facility maintenance.

High ground clearance and steady, protected tracked (or 4WD) base provide fast and smooth access on rough terrain. All Leguans are designed to be driven safely while standing on the platform to increase efficiency while transitioning on site. Many leading features such as the automatic levelling is standard, but operators can also opt for many optional features such as the extra speed for the fastest driving speed in the market.

190

Leguan 190.

Standard features.

- 14 hp Kubota diesel engine + 230 V electric motor
- 230 V and 12 V power outlets on platform
- Automatic engine RPM control
- Automatic levelling of the outriggers
- Proportional outreach monitoring system
- Electric rotation of the platform
- JIB-boom with 120-degree operating range
- Electric and hand pump powered emergency lowering
- Lower controls with integrated service display
- 12 V booster points
- Signal horn

Optional features.

- Extra drive speed (max. 5.2 km/h)
- Remote control for driving and outriggers
- LED spot lights for platform
- Tool trays on platform
- Outrigger beacons
- Hose to platform (air/water)
- Engine heater
- Larger plates for outriggers
- Non-marking tracks / tyres
- Narrow single person platform
- Leguan special trailer

Technical features.

Max. lift capacity	230 kg (2 persons)
Max. working height	19.00 m
Max. platform height	17.00 m
Max. outreach	8.1 m (230 kg) – 9.8 m (120 kg)
Transport dimensions, L x W x H	5.1 x 1.33 x 2.01 m
Platform dimensions	1.33 x 0.75 m
Rotation of the platform	90° (±45°)
Slewing	360°
Gradeability	40% (22°)
Dimensions w/o platform, L x W	4.44 x 1.25 m
Outrigger support dimensions	3.60 x 3.69 m
Max. slope for outriggers	21% (12°)
Weight	2,660 kg
Engine	Kubota 14 hp diesel or 230 V / 2.2 kW electric
Drive system: hydraulic	4WD / tracks
Max. drive speed	2.6 km/h (5.2 km/h option)

All rights reserved. © Leguan Lifts 2023

Leguan 135 NEO.

135 NEO

13.4 m
max. working height

7.1 m
max. side reach

250 kg
max. lift capacity

User-friendly and versatile joystick-controlled spider lift.

135 NEO represents new generation of spider lifts combining easy-to-use interface, heavy lifting capacity, and efficiency-enhancing technology. The state-of-the-art joystick control allows simultaneous use of multiple boom movements with just one hand. Setting up or finishing the operation is efficient with the help of the smart automatic levelling function and the home function that brings booms automatically back to transport position.

Transitioning the Leguan 135 NEO through tight entrances is easy due to smooth drive control and small width of the spider lift. The new innovative boom structure helps the operator to maintain distance to the walls and the unparalleled user interface makes controlling the spider lift easier than ever before. The Leguan 135 NEO is a great fit for rental use and all kinds of facility maintenance and installation work both indoors and outdoors.

135 NEO

Leguan 135 NEO.

Standard features.

- 13 hp Honda petrol engine + 230 V electric motor
- 230 V and 12 V power outlets on platform
- Automatic engine RPM control
- Automatic start-stop function for electric motor
- Automatic levelling of the outriggers
- Proportional outreach monitoring system
- Electric rotation of the platform
- Home function / Back to work position function
- Electric and hand pump powered emergency lowering
- Lower controls
- 12 V booster points
- Signal horn

Optional features.

- Remote control for driving and outriggers
- LED spot lights for platform
- Tool trays on platform
- Outrigger beacons
- Hose to platform (air/water)
- Larger plates for outriggers
- Non-marking tracks / tyres
- Narrow single person platform
- Leguan special trailer

Technical features.

Max. lift capacity	250 kg (2 persons)
Max. working height	13.40 m
Max. platform height	11.40 m
Max. outreach	7.1 m (120 kg) – 6.6 m (250 kg)
Transport dimensions, L x W x H	4.58 x 1.33 x 1.93 m
Platform dimensions	1.33 x 0.75 m
Rotation of the platform	80° (±40°)
Slewing	360°
Gradeability	40% (22°)
Dimensions w/o platform, L x W	3.91 x 0.89 m
Outrigger support dimensions	3.27 x 3.29 m
Max. slope for outriggers	21% (12°)
Weight	1,650 kg
Engine	Honda 13 hp petrol or 230 V / 2.2 kW electric
Drive system: hydraulic	4WD / tracks
Max. drive speed	2.5 km/h

All rights reserved. © Leguan Lifts 2023

Optional features.

LEGUAN spider lifts are always well-equipped and come with many advanced features as standard to ensure the highest efficiency. However, you can equip your own Leguan with many additional features to match the requirements of your line of work or job sites.

Some of the most popular optional features are the outrigger beacons that improve work safety. For the colder climates we recommend engine heater for the diesel engine. Inquire more about the standard and optional features from your local Leguan dealer.

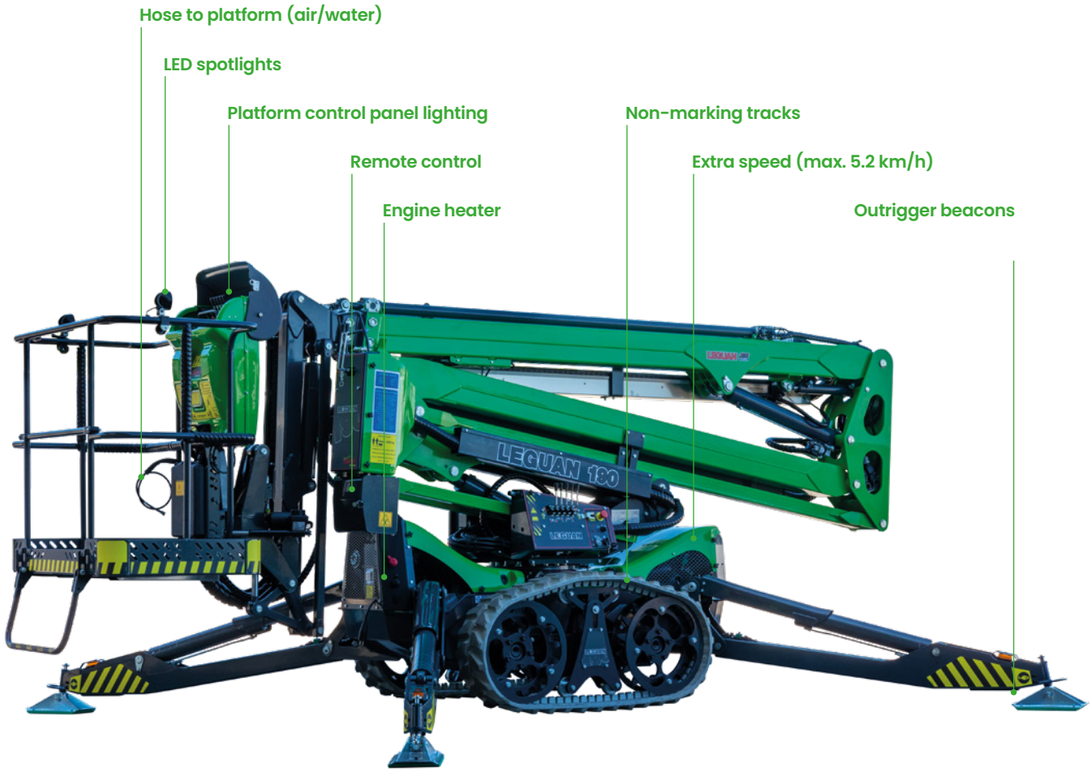

Leguan special trailers.

LEGUAN special trailer is a lightweight trailer for transporting Leguans without the need for heavy-duty hauling equipment. Fastening is quick with chains and straps included and driving off the trailer is easy with the tailor-made ramps. Some of the spider lifts can be used also directly from the trailer without unloading. The Leguan special trailers are CE certified.

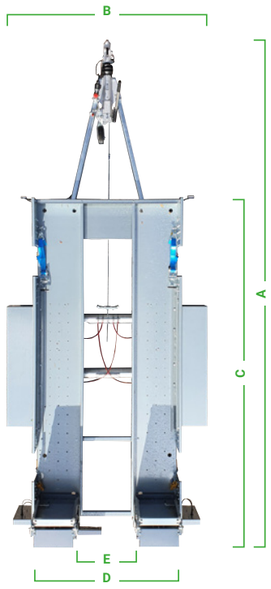

Trailer model.	2021	3017	3023
Leguan model.	135 Neo	165 / 190	225
A. length	4440 mm	5300 mm	5280 mm
B. width	1580 mm	2030 mm	2040 mm
C. loading length	2900 mm	3400 mm	3400 mm
D. loading width	920 mm	1390 mm	1390 mm
E. gap between ramps	380 mm	560 mm	760 mm
Own weight	495 kg	680 kg	600 kg
Total weight	2520 kg	3500 kg	3500 kg
Min. towing capacity	2100 kg	3500 kg	3500 kg

Confirm the up-to-date trailer measurements and availability from your Leguan reseller.

All rights reserved.
© Leguan Lifts 2023

Hybeko AS.
Bølevegen 212,
3713 Skien
(+47) 35 50 85 00
www.hybeko.no

Leguan Lifts Oy.
Ylötie 10,
33470 Ylöjärvi
FINLAND

www.leguanlifts.com

Due to continuous improvement, we retain the right to change specifications without notice.
© 2023 Leguan Lifts Oy. All rights reserved.